SEMI PRO LOCKER

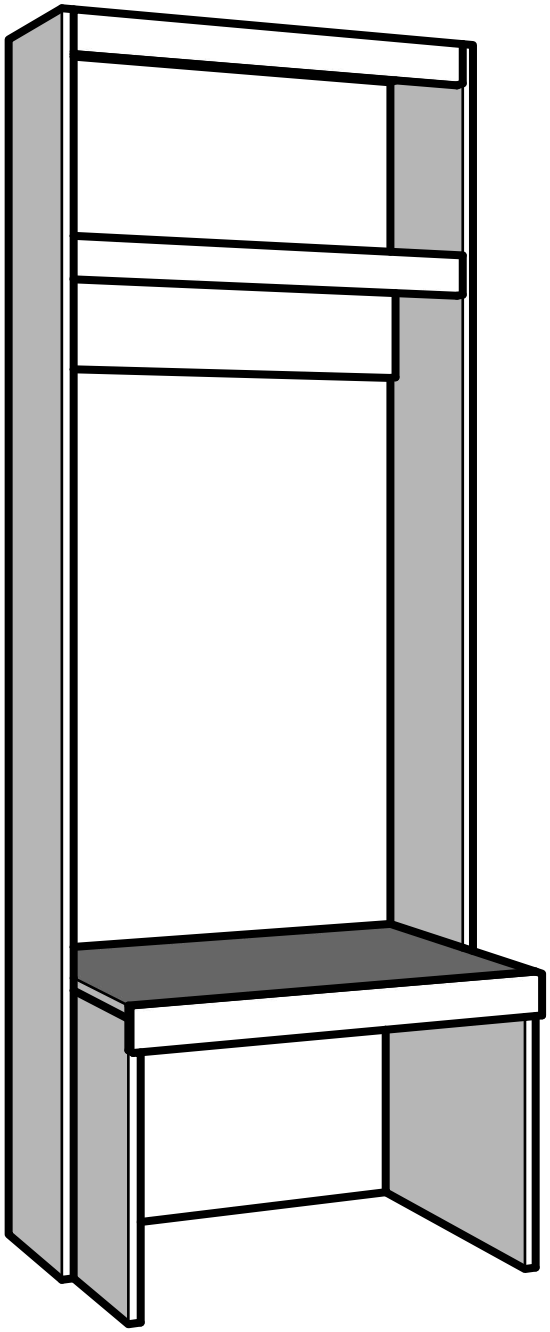

32x SCREW 1 1/4

25x SCREW 1/2

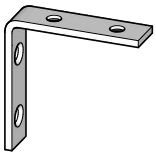

2x ANGLE BRACKETS

21x SCREW CAPS

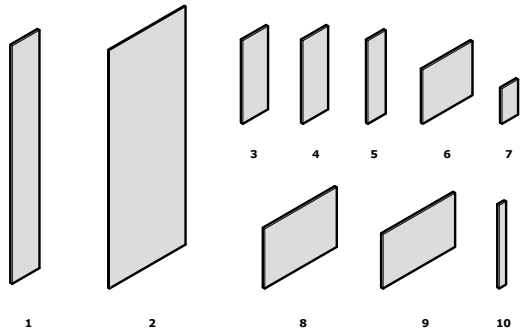

1. 2x SIDE PANEL
2. 1x BACKING
3. 1x TOP SHELF
4. 1x BOTTOM SHELF
5. 1x SHELF SUPPORT
6. 2x SEAT SUPPORT
7. 2x SHELF SPACER
8. 1x SEAT PANEL
9. 1x BACK PANEL
10. 3x SHELF TRIM

1 SIDE PANELS

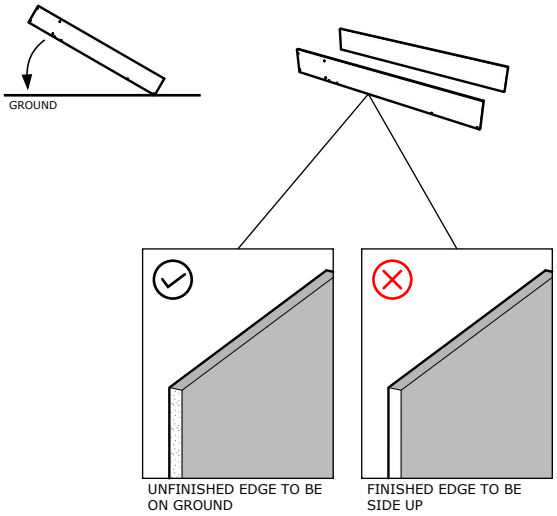

2 TOP SHELF

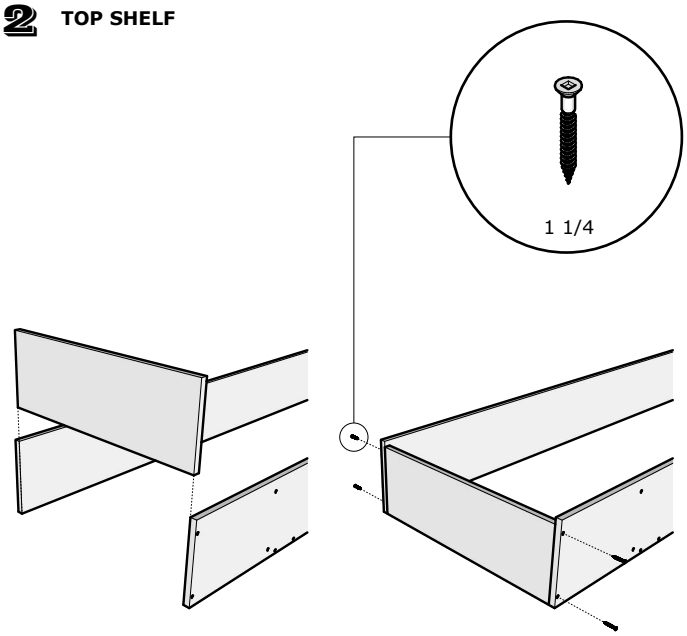

3

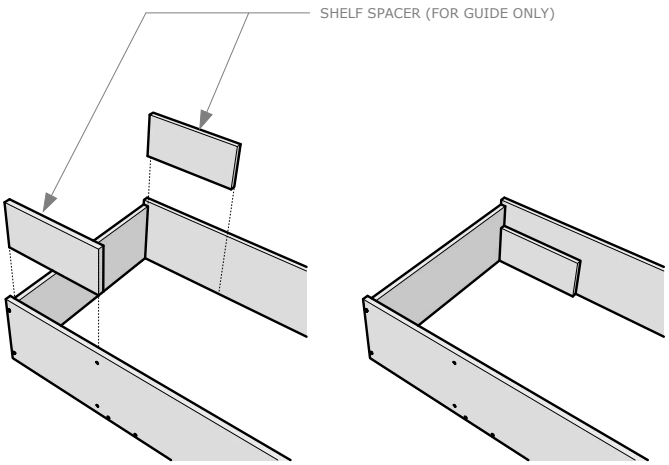

4 BOTTOM SHELF

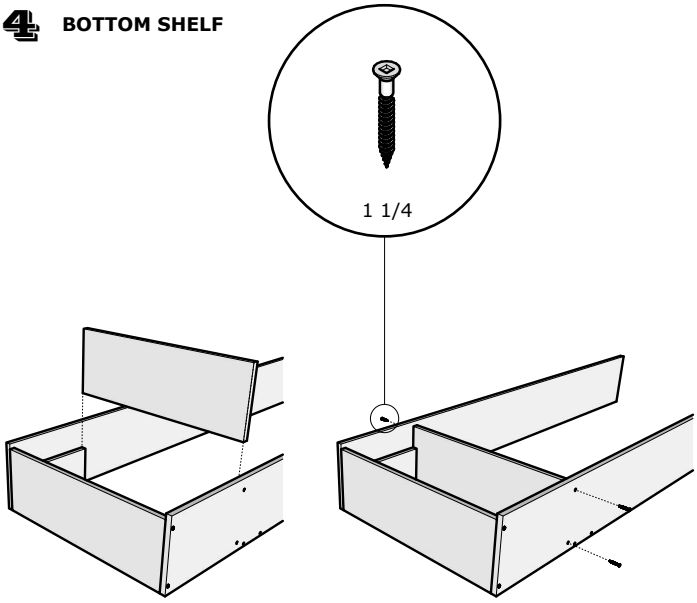

5

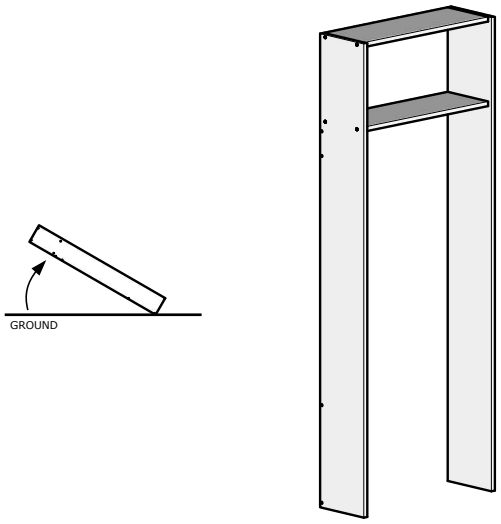

6 SHELF SUPPORT

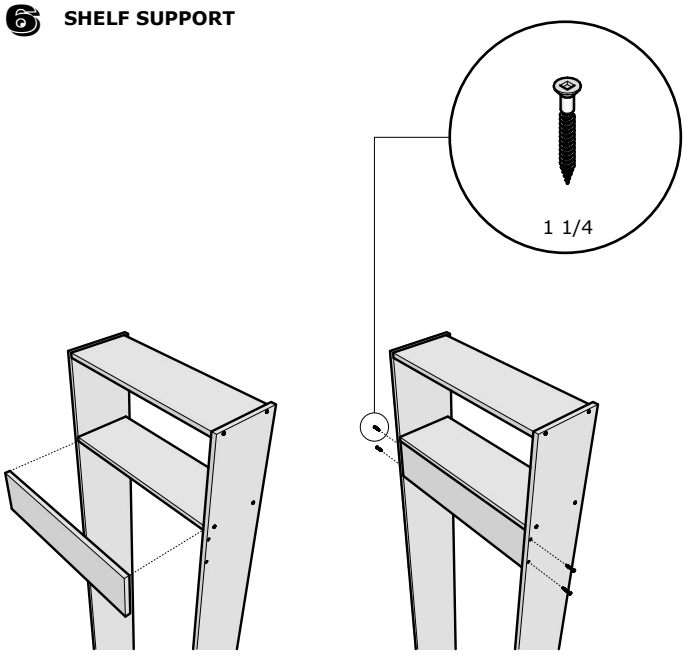

7 BACK PANEL

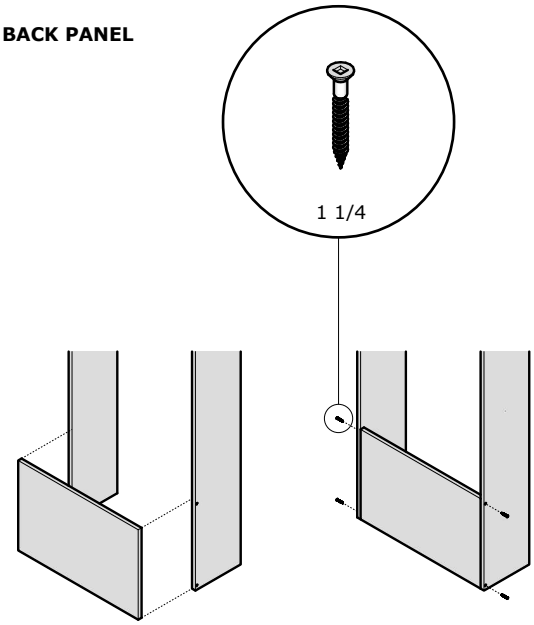

8 SEAT SUPPORT

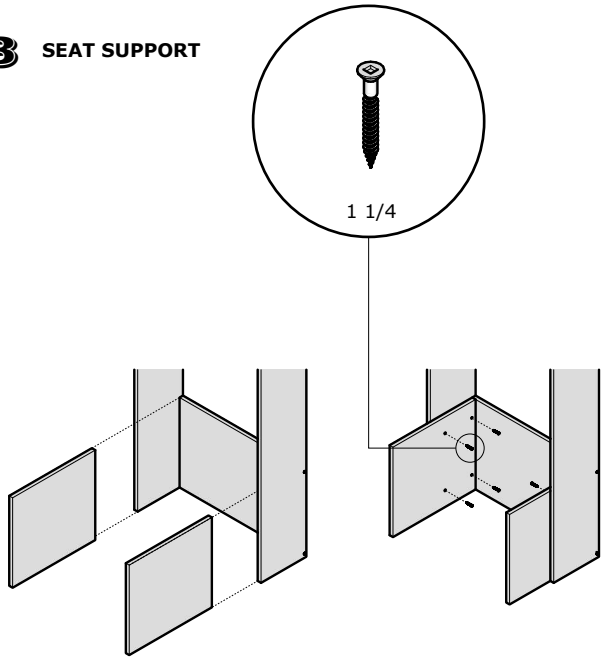

9 SEAT PANEL

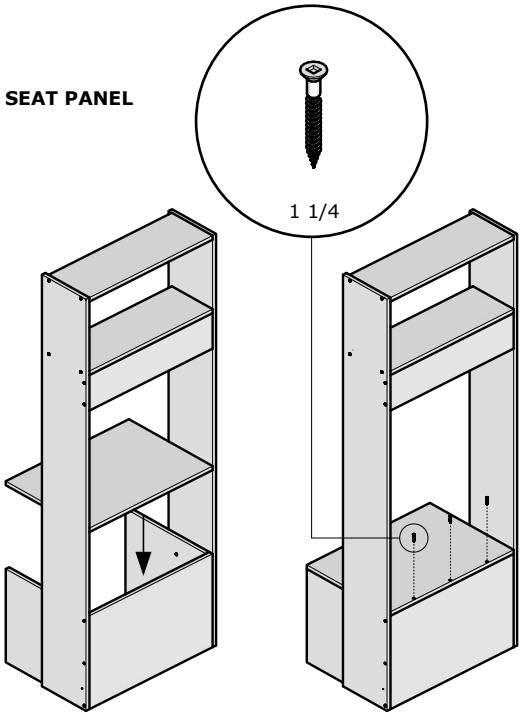

10

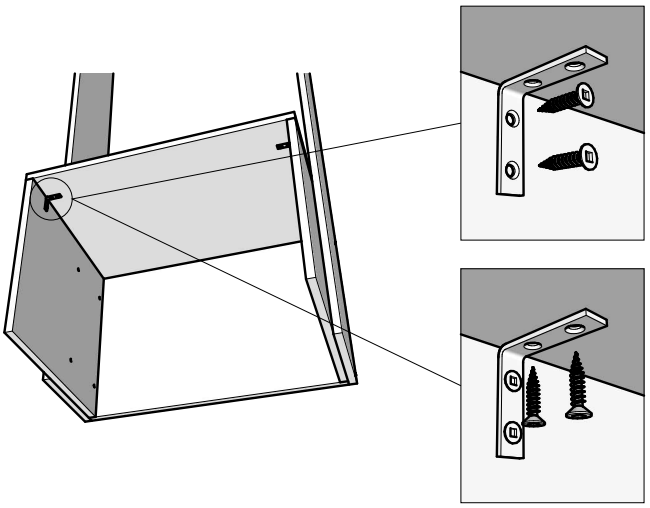

11 SHELF TRIM

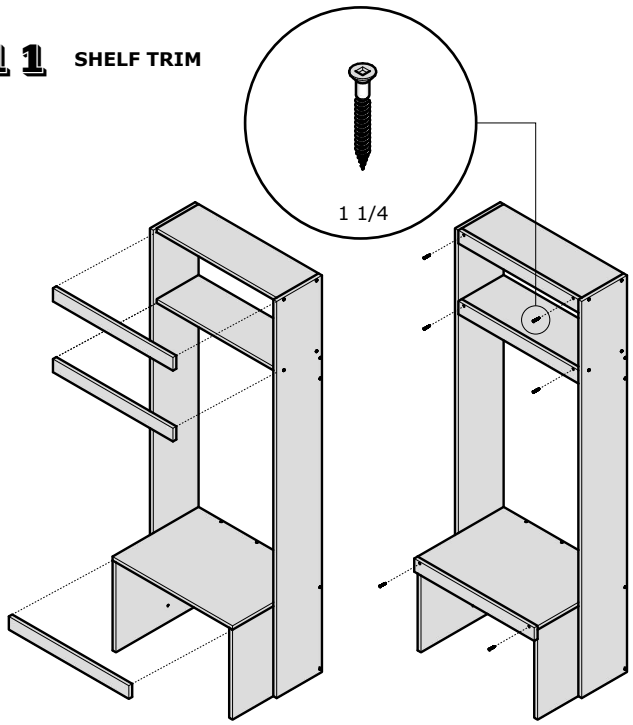

12

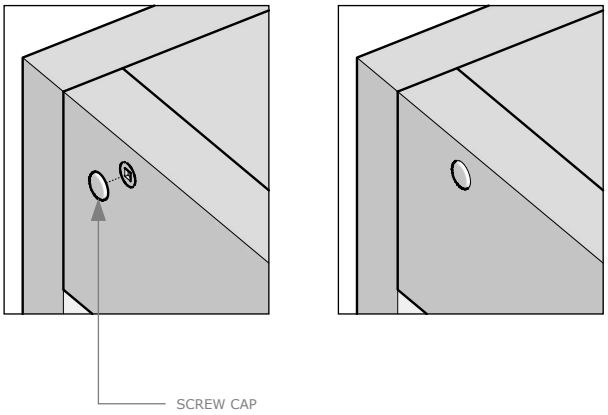

13

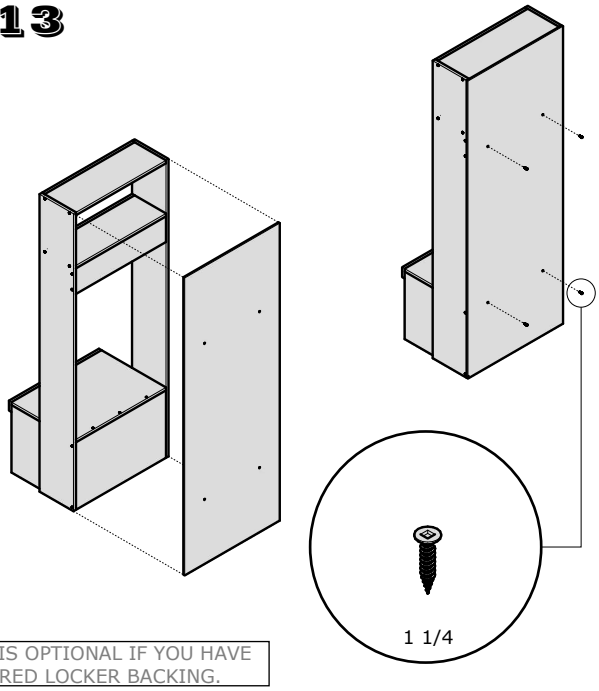

THIS IS OPTIONAL IF YOU HAVE ORDERED LOCKER BACKING.